FOAM Mouldings

818-365-9590 Tel
818-365-9591 Fax
foamremodel.com

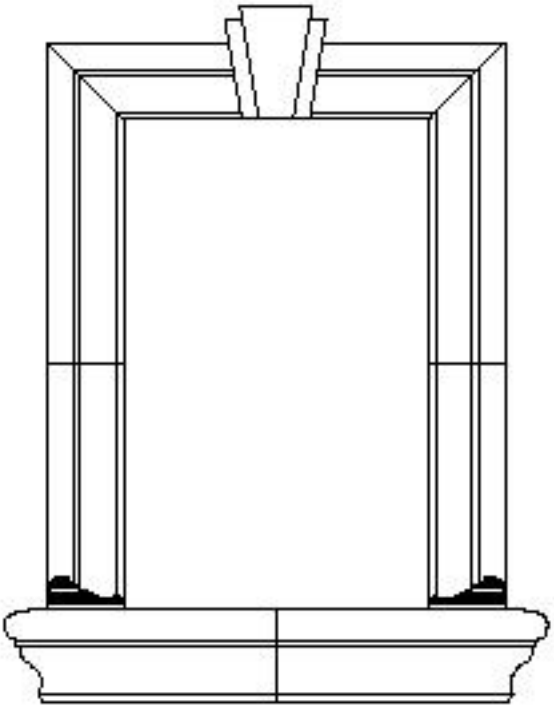

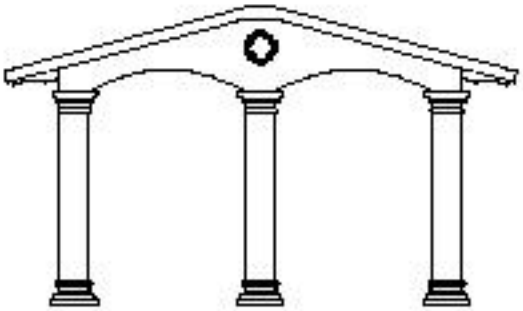

We Offer:
- -Raw Foam
- -Stucco Ready Foam
- -Paint Ready Foam
- -Finished Foam
- -Specialty Finishes
  - *Stone
  - *Sandstone
  - *Smooth
  - *Stained
  - *Sand

Why Foam?

Elegant

Affordable

Lightweight

Easy to Install

Durable when coated

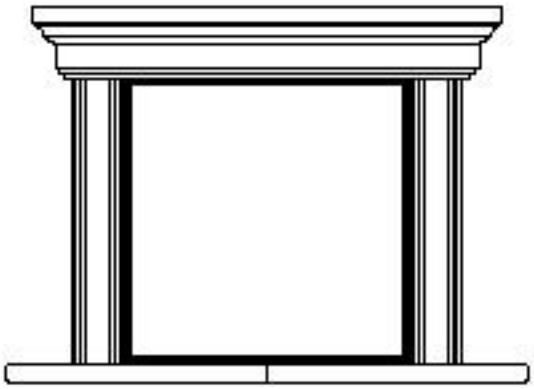

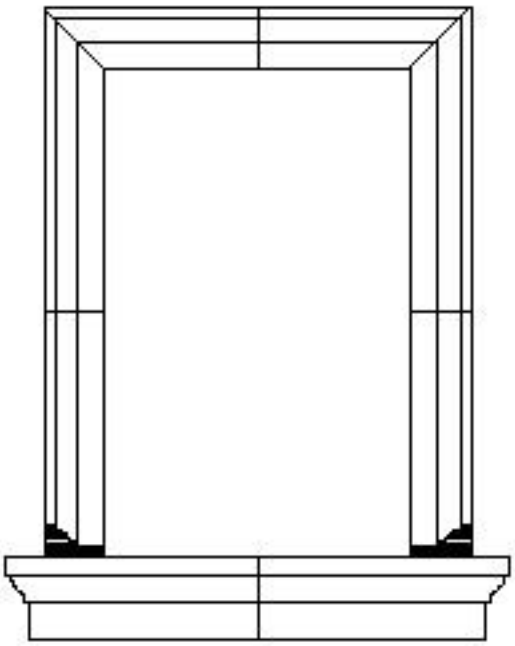

11852 Glenoaks Blvd. San Fernando, CA 91340

foamremodel.com

818-365-9590 Tel
818-365-9591 Fax

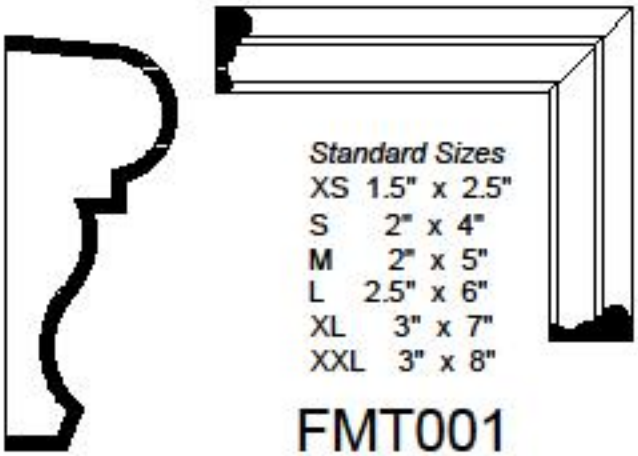

Standard Sizes

XS	1.5" x 2.5"
S	2" x 4"
M	2" x 5"
L	2.5" x 6"
XL	3" x 7"
XXL	3" x 8"

FMT001

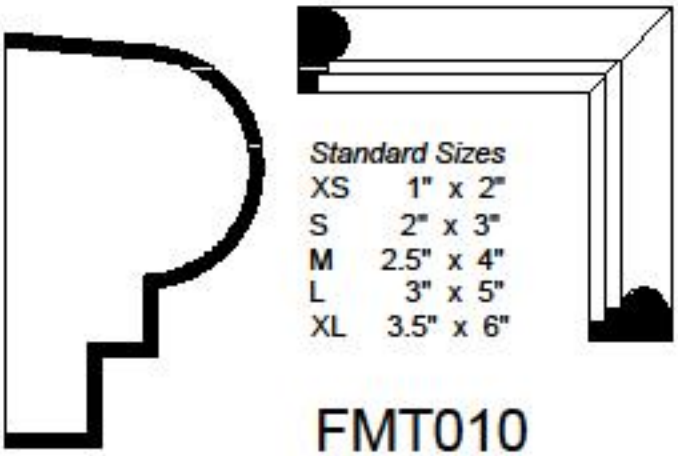

Standard Sizes

XS	1" x 2"
S	2" x 3"
M	2.5" x 4"
L	3" x 5"
XL	3.5" x 6"

FMT010

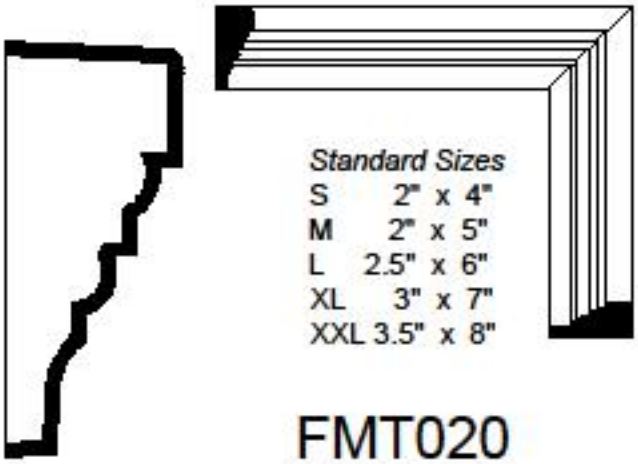

Standard Sizes

S	2" x 4"
M	2" x 5"
L	2.5" x 6"
XL	3" x 7"
XXL	3.5" x 8"

FMT020

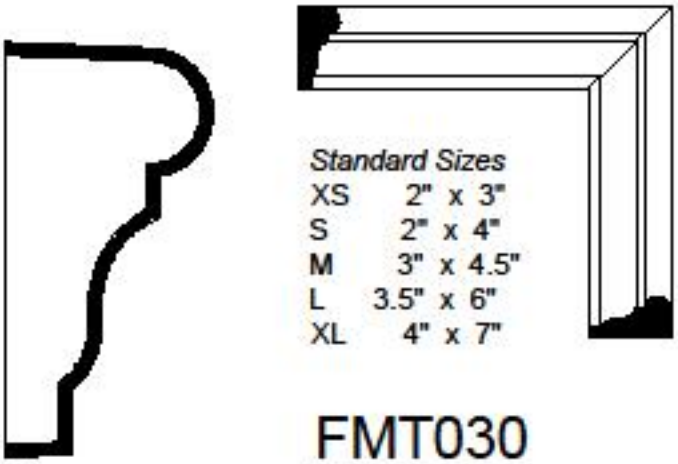

Standard Sizes

XS	2" x 3"
S	2" x 4"
M	3" x 4.5"
L	3.5" x 6"
XL	4" x 7"

FMT030

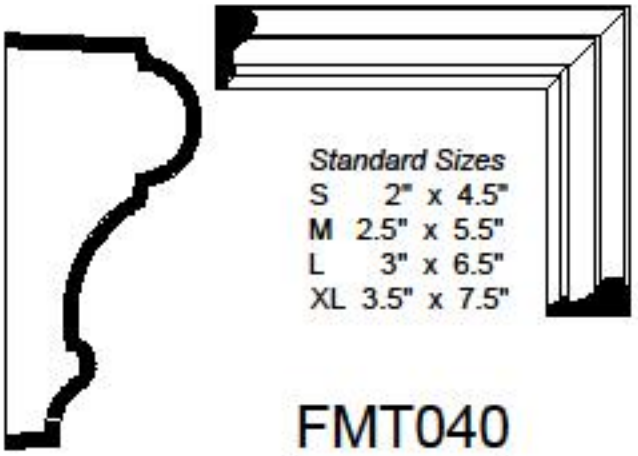

Standard Sizes

S	2" x 4.5"
M	2.5" x 5.5"
L	3" x 6.5"
XL	3.5" x 7.5"

FMT040

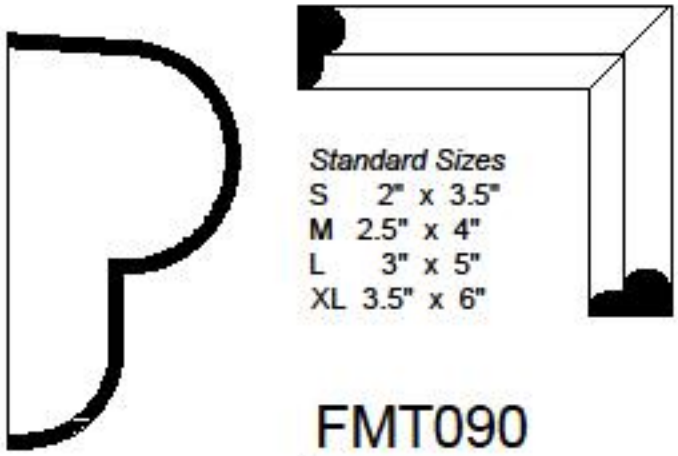

Standard Sizes

S	2" x 3.5"
M	2.5" x 4"
L	3" x 5"
XL	3.5" x 6"

FMT090

Window & Door Trims

11852 Glenoaks Blvd. San Fernando, CA 91340

foamremodel.com

818-365-9590 Tel
818-365-9591 Fax

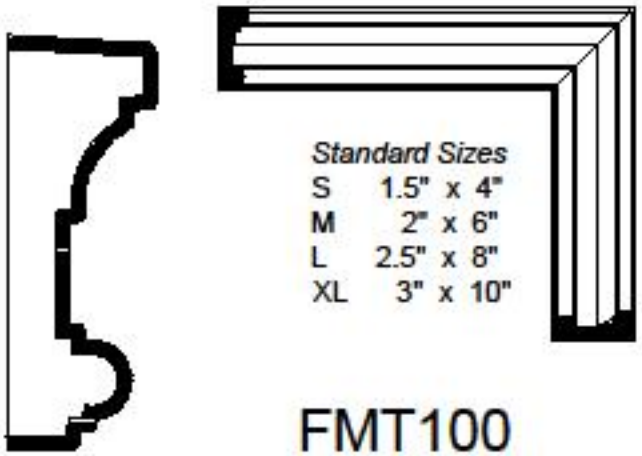

Standard Sizes

S	1.5" x 4"
M	2" x 6"
L	2.5" x 8"
XL	3" x 10"

FMT100

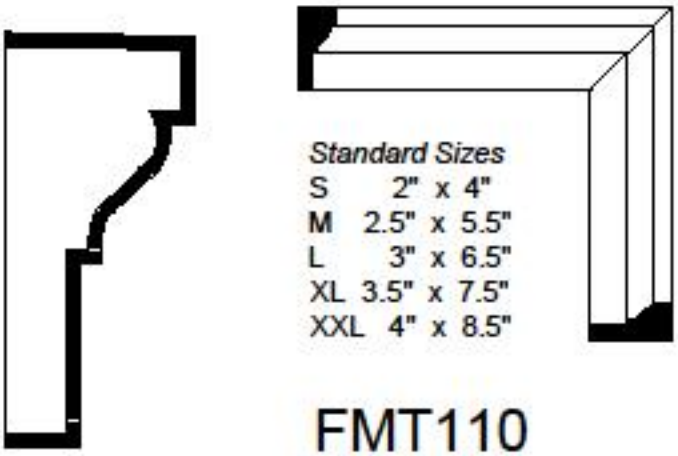

Standard Sizes

S	2" x 4"
M	2.5" x 5.5"
L	3" x 6.5"
XL	3.5" x 7.5"
XXL	4" x 8.5"

FMT110

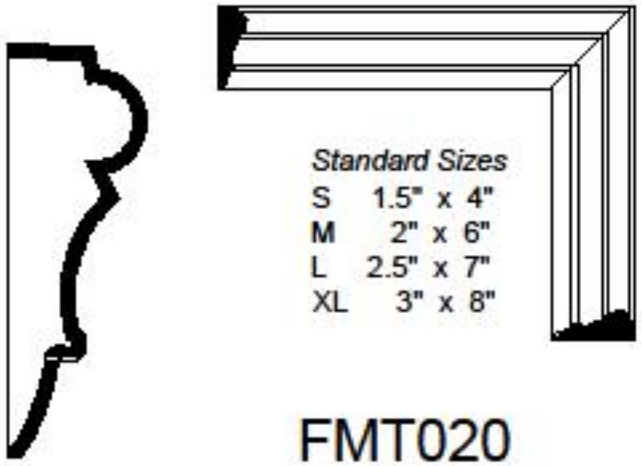

Standard Sizes

S	1.5" x 4"
M	2" x 6"
L	2.5" x 7"
XL	3" x 8"

FMT020

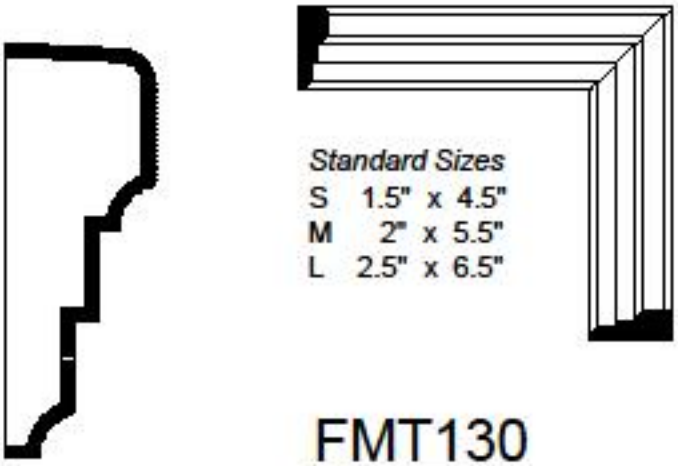

Standard Sizes

S	1.5" x 4.5"
M	2" x 5.5"
L	2.5" x 6.5"

FMT130

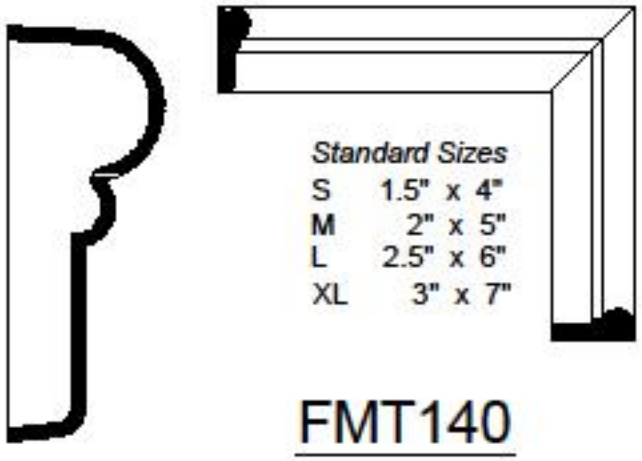

Standard Sizes

S	1.5" x 4"
M	2" x 5"
L	2.5" x 6"
XL	3" x 7"

FMT140

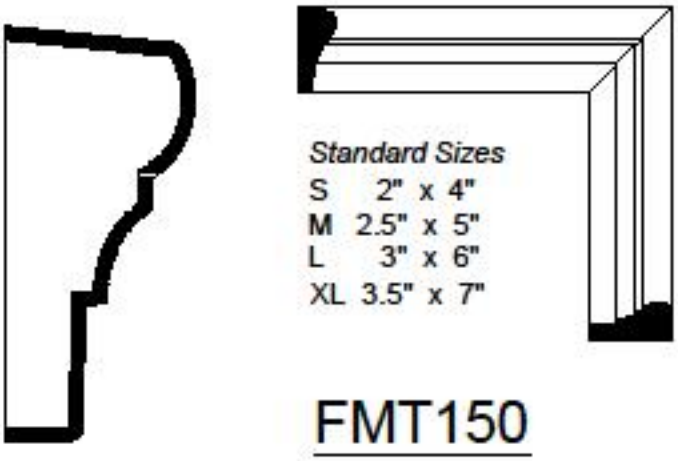

Standard Sizes

S	2" x 4"
M	2.5" x 5"
L	3" x 6"
XL	3.5" x 7"

FMT150

Window & Door Trims

11852 Glenoaks Blvd. San Fernando, CA 91340

foamremodel.com

818-365-9590 Tel
818-365-9591 Fax

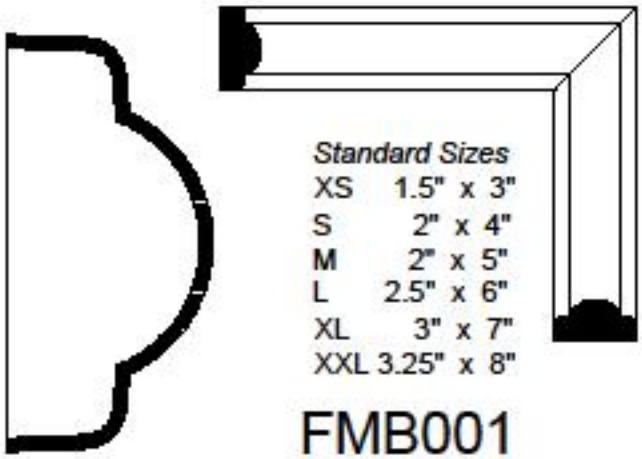

Standard Sizes

XS	1.5" x 3"
S	2" x 4"
M	2" x 5"
L	2.5" x 6"
XL	3" x 7"
XXL	3.25" x 8"

FMB001

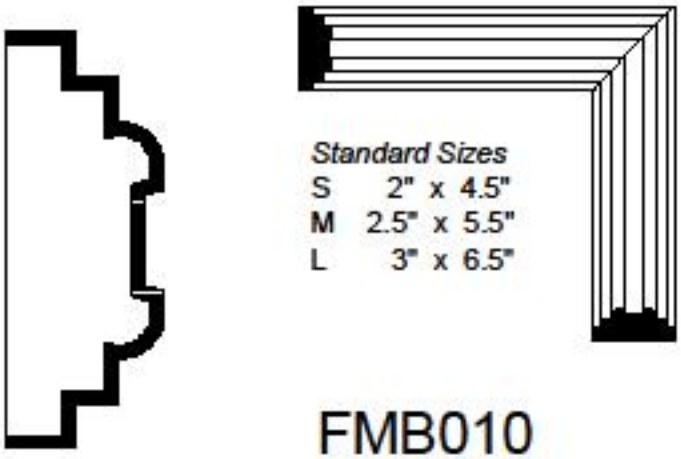

Standard Sizes

S	2" x 4.5"
M	2.5" x 5.5"
L	3" x 6.5"

FMB010

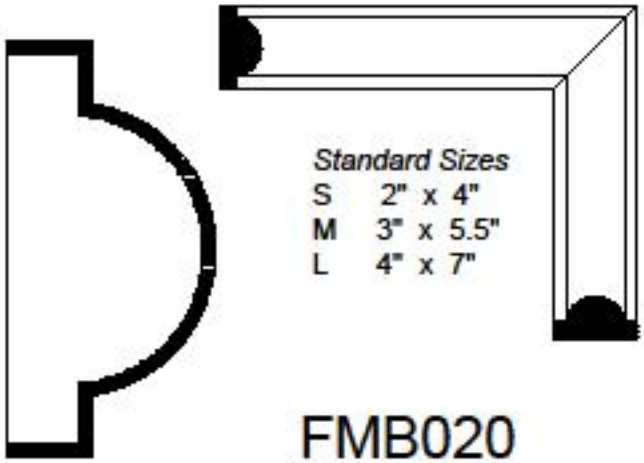

Standard Sizes

S	2" x 4"
M	3" x 5.5"
L	4" x 7"

FMB020

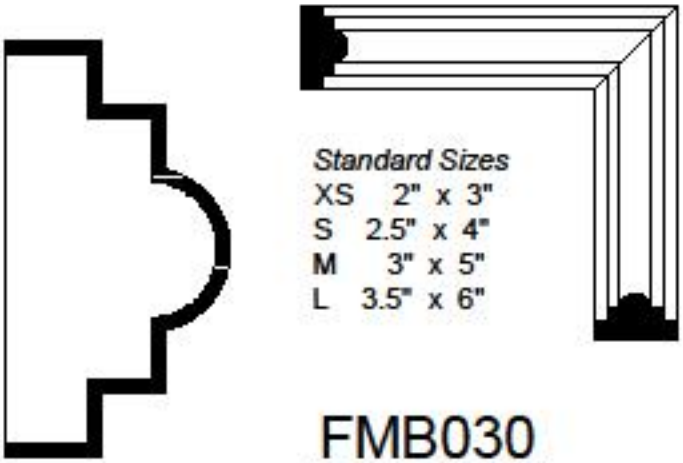

Standard Sizes

XS	2" x 3"
S	2.5" x 4"
M	3" x 5"
L	3.5" x 6"

FMB030

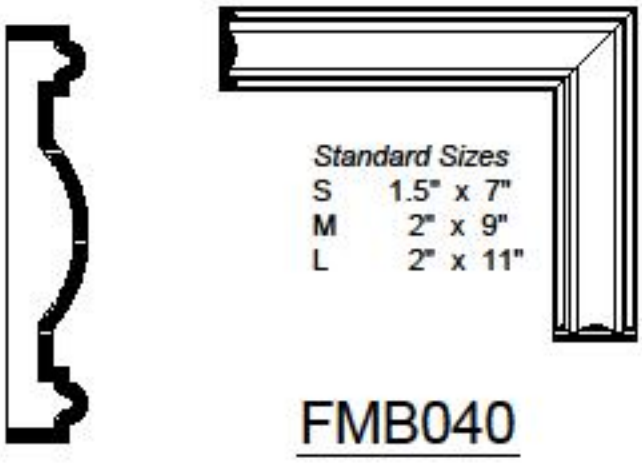

Standard Sizes

S	1.5" x 7"
M	2" x 9"
L	2" x 11"

FMB040

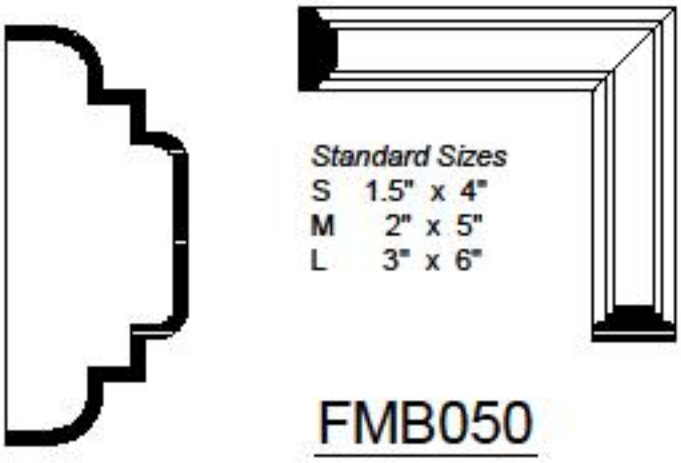

Standard Sizes

S	1.5" x 4"
M	2" x 5"
L	3" x 6"

FMB050

Bands and Surrounds

11852 Glenoaks Blvd. San Fernando, CA 91340

foamremodel.com

818-365-9590 Tel
818-365-9591 Fax

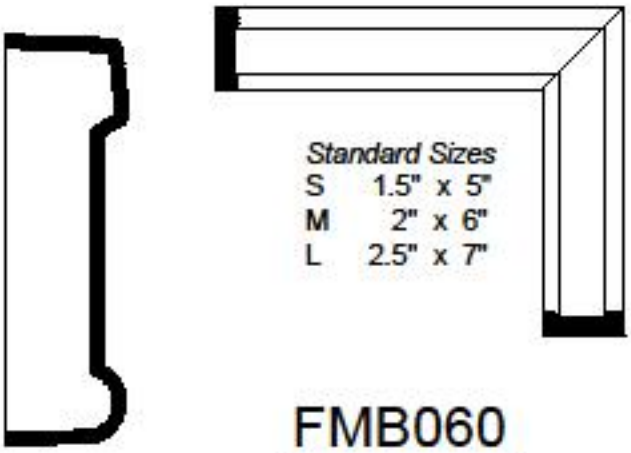

Standard Sizes
S 1.5" x 5"
M 2" x 6"
L 2.5" x 7"

FMB060

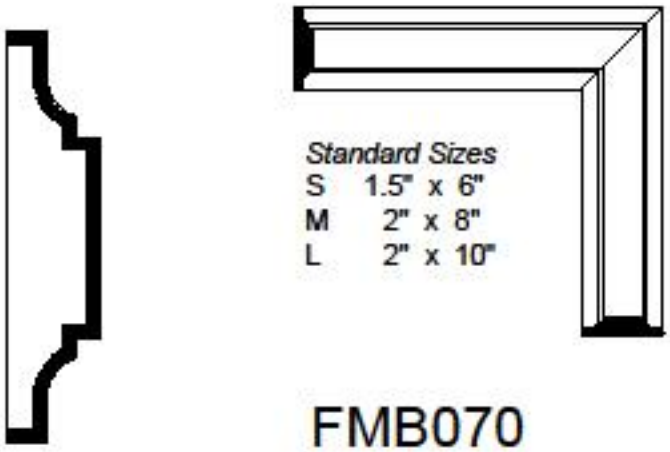

Standard Sizes
S 1.5" x 6"
M 2" x 8"
L 2" x 10"

FMB070

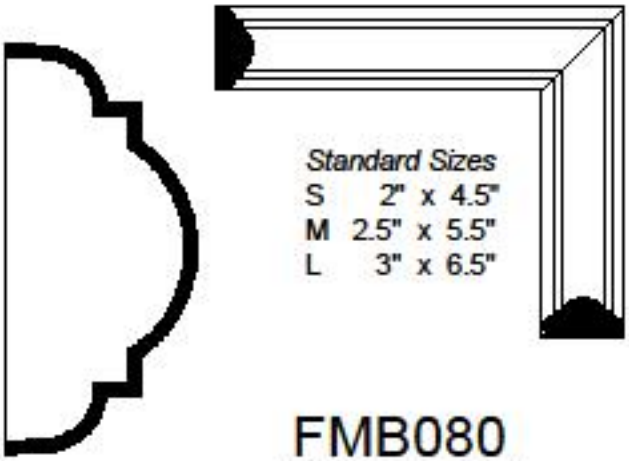

Standard Sizes
S 2" x 4.5"
M 2.5" x 5.5"
L 3" x 6.5"

FMB080

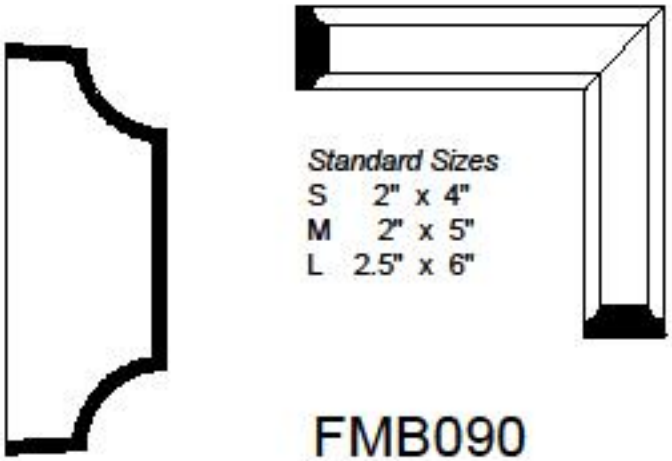

Standard Sizes
S 2" x 4"
M 2" x 5"
L 2.5" x 6"

FMB090

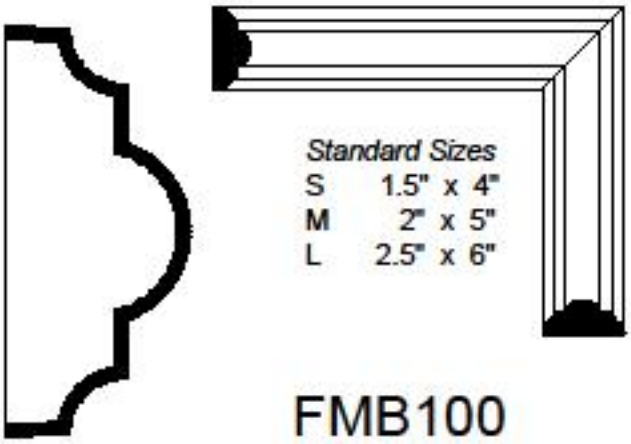

Standard Sizes
S 1.5" x 4"
M 2" x 5"
L 2.5" x 6"

FMB100

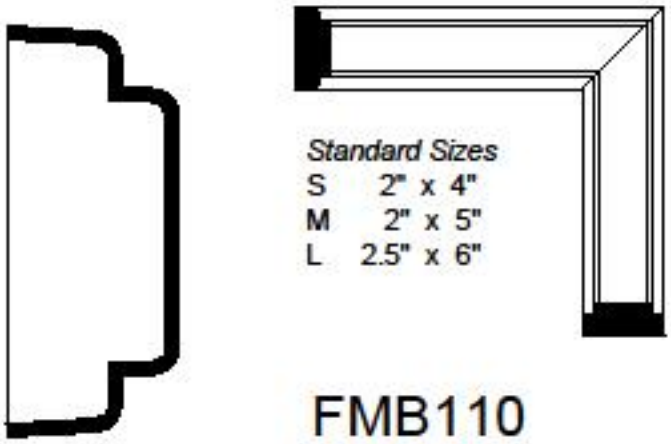

Standard Sizes
S 2" x 4"
M 2" x 5"
L 2.5" x 6"

FMB110

Bands and Surrounds

11852 Glenoaks Blvd. San Fernando, CA 91340

foamremodel.com

818-365-9590 Tel
818-365-9591 Fax

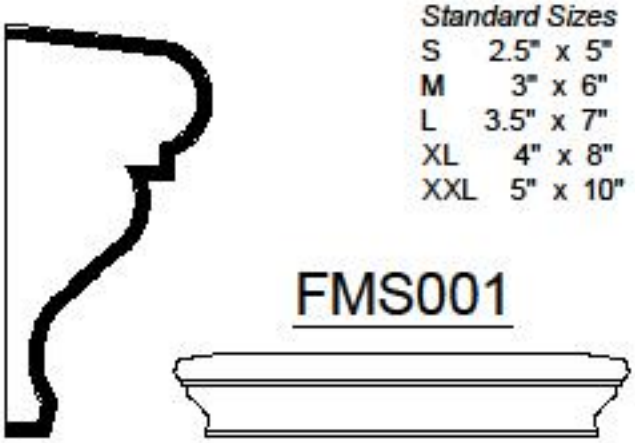

Standard Sizes

S	2.5" x 5"
M	3" x 6"
L	3.5" x 7"
XL	4" x 8"
XXL	5" x 10"

FMS001

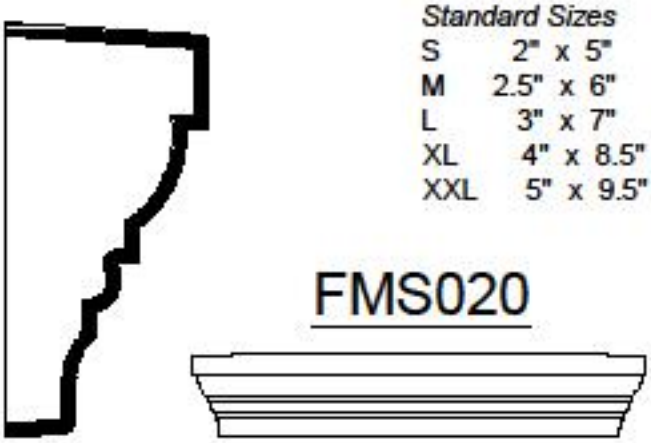

Standard Sizes

S	2" x 5"
M	2.5" x 6"
L	3" x 7"
XL	4" x 8.5"
XXL	5" x 9.5"

FMS020

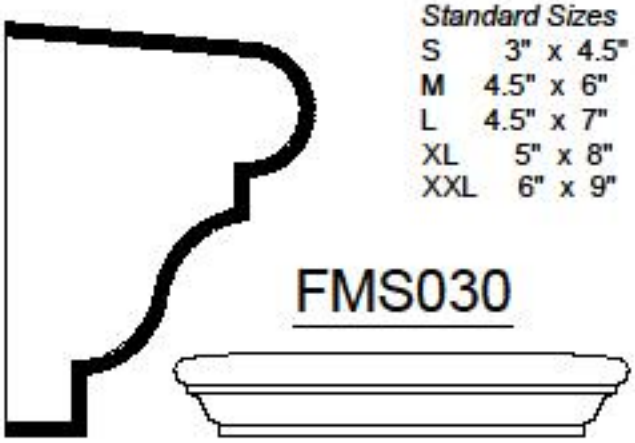

Standard Sizes

S	3" x 4.5"
M	4.5" x 6"
L	4.5" x 7"
XL	5" x 8"
XXL	6" x 9"

FMS030

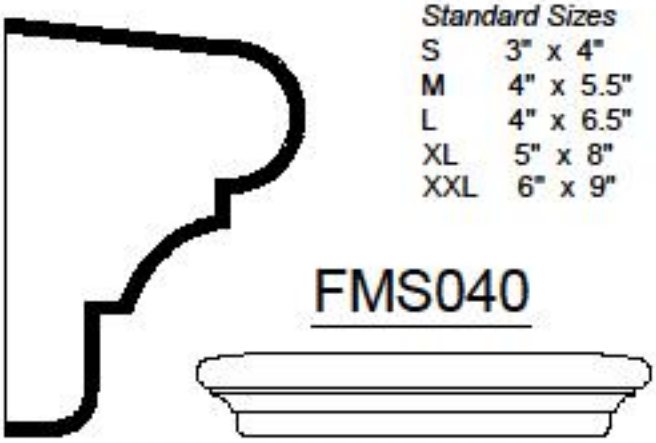

Standard Sizes

S	3" x 4"
M	4" x 5.5"
L	4" x 6.5"
XL	5" x 8"
XXL	6" x 9"

FMS040

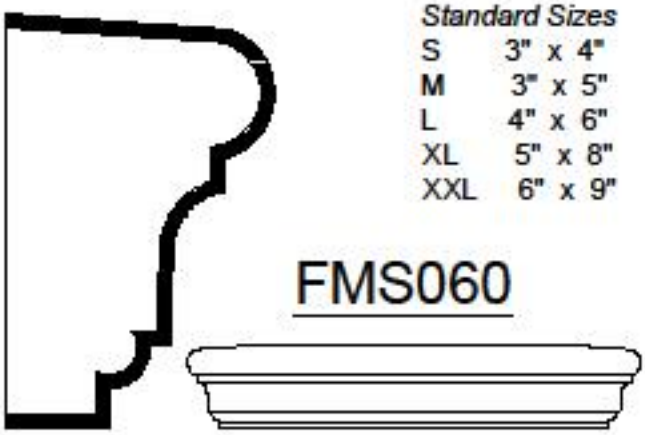

Standard Sizes

S	3" x 4"
M	3" x 5"
L	4" x 6"
XL	5" x 8"
XXL	6" x 9"

FMS060

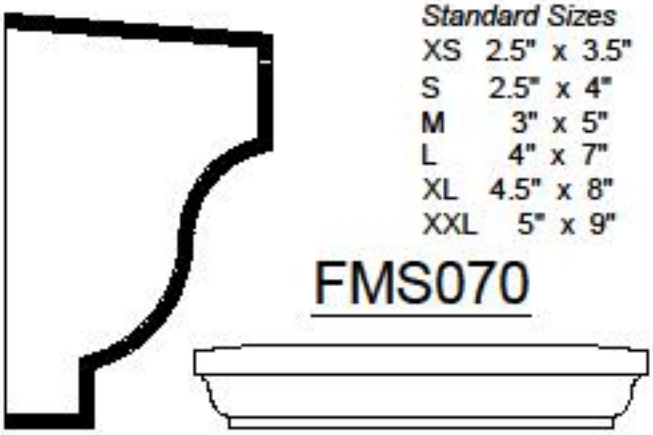

Standard Sizes

XS	2.5" x 3.5"
S	2.5" x 4"
M	3" x 5"
L	4" x 7"
XL	4.5" x 8"
XXL	5" x 9"

FMS070

Window Sills

11852 Glenoaks Blvd. San Fernando, CA 91340

foamremodel.com

818-365-9590 Tel
818-365-9591 Fax

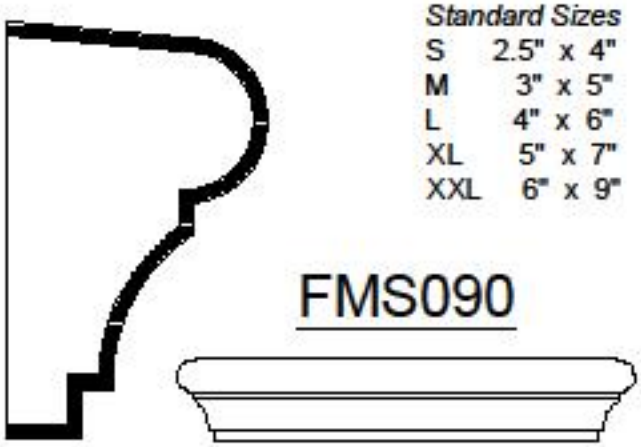

Standard Sizes

S	2.5" x 4"
M	3" x 5"
L	4" x 6"
XL	5" x 7"
XXL	6" x 9"

FMS090

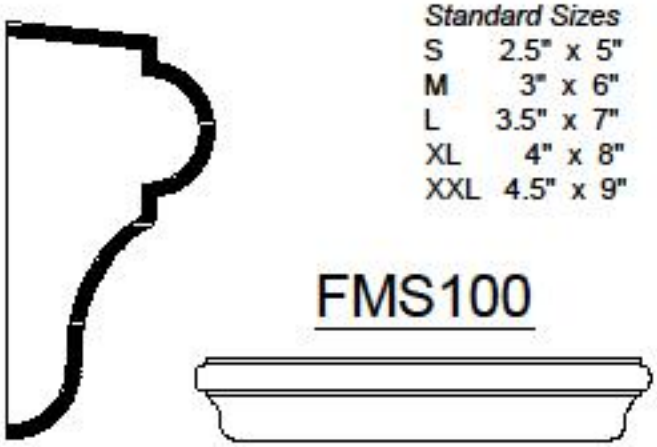

Standard Sizes

S	2.5" x 5"
M	3" x 6"
L	3.5" x 7"
XL	4" x 8"
XXL	4.5" x 9"

FMS100

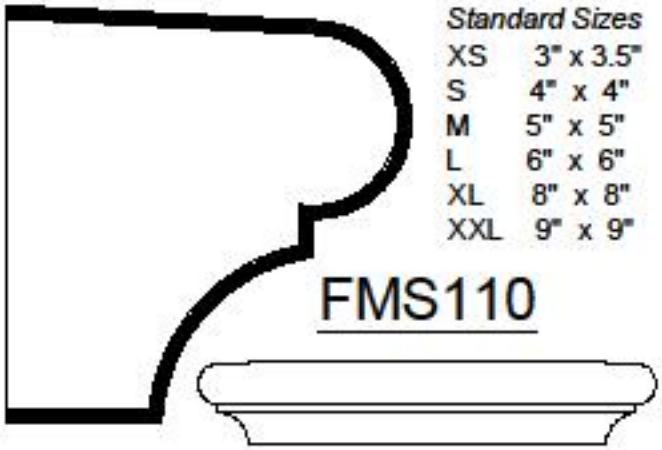

Standard Sizes

XS	3" x 3.5"
S	4" x 4"
M	5" x 5"
L	6" x 6"
XL	8" x 8"
XXL	9" x 9"

FMS110

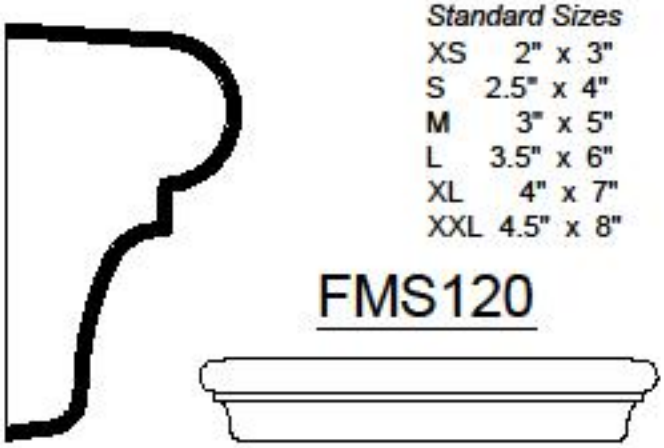

Standard Sizes

XS	2" x 3"
S	2.5" x 4"
M	3" x 5"
L	3.5" x 6"
XL	4" x 7"
XXL	4.5" x 8"

FMS120

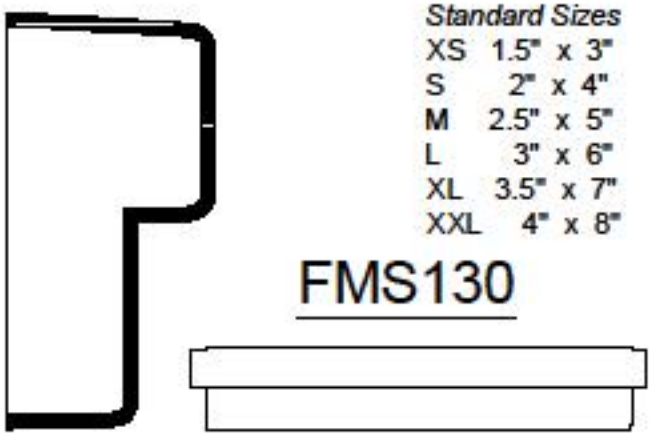

Standard Sizes

XS	1.5" x 3"
S	2" x 4"
M	2.5" x 5"
L	3" x 6"
XL	3.5" x 7"
XXL	4" x 8"

FMS130

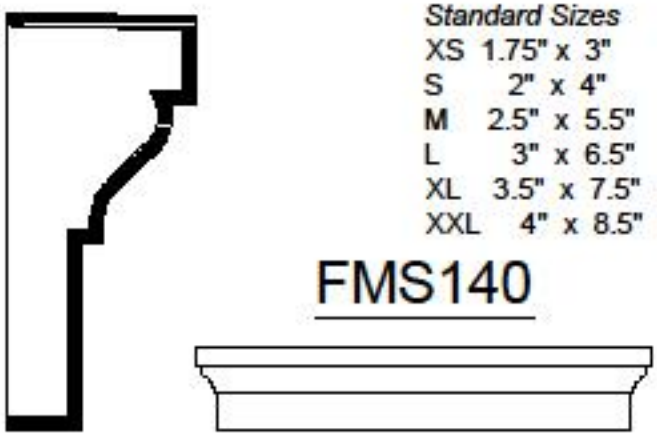

Standard Sizes

XS	1.75" x 3"
S	2" x 4"
M	2.5" x 5.5"
L	3" x 6.5"
XL	3.5" x 7.5"
XXL	4" x 8.5"

FMS140

Window Sills

11852 Glenoaks Blvd. San Fernando, CA 91340

foamremodel.com

818-365-9590 Tel
818-365-9591 Fax

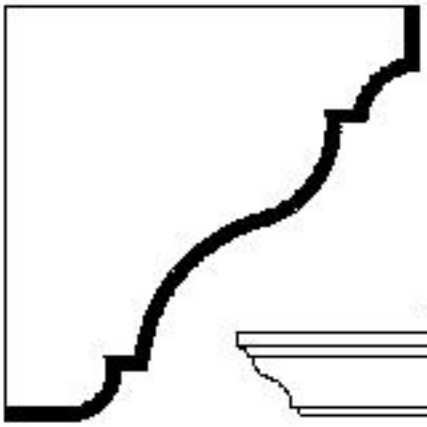

Standard Sizes

XS	4" x 4"
S	6" x 6"
M	8" x 8"
L	10" x 10"
XL	12" x 12"

FMC001

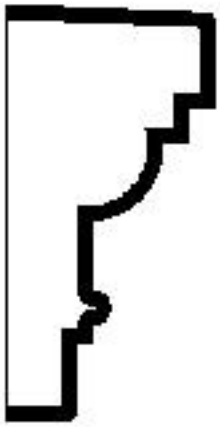

Standard Sizes

S	4" x 8"
M	6" x 12"
L	7" x 14"
XL	8" x 16"

FMC010

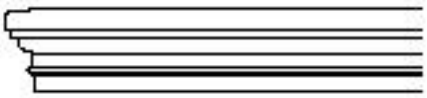

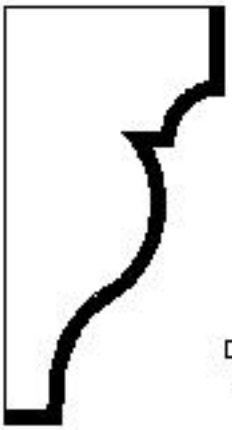

Standard Sizes

S	4" x 7"
M	4" x 8"
L	5" x 10"
XL	6" x 12"

FMC020

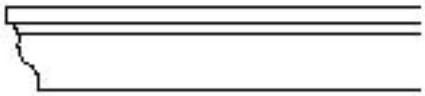

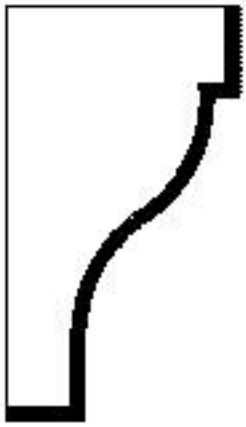

Standard Sizes

S	4" x 6"
M	4.5" x 8"
L	5" x 10"

FMC030

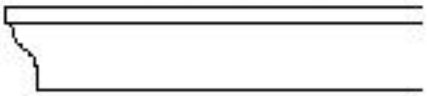

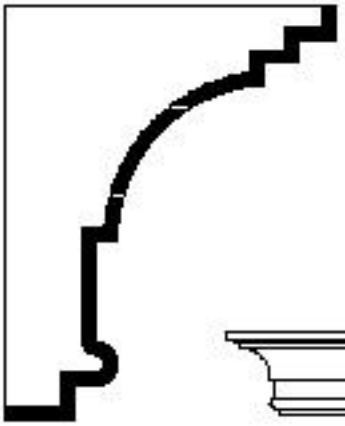

Standard Sizes

S	6" x 8"
M	8" x 10"
L	10" x 12"

FMC040

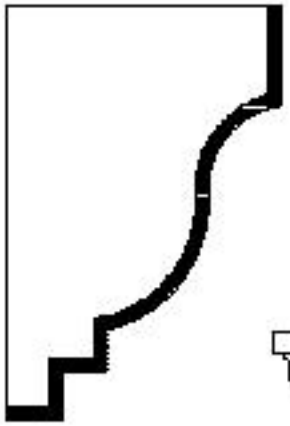

Standard Sizes

S	4" x 6.5"
M	6" x 9"
L	8" x 12"

FMC050

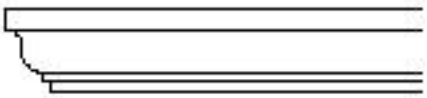

Crowns

11852 Glenoaks Blvd. San Fernando, CA 91340

foamremodel.com

818-365-9590 Tel
818-365-9591 Fax

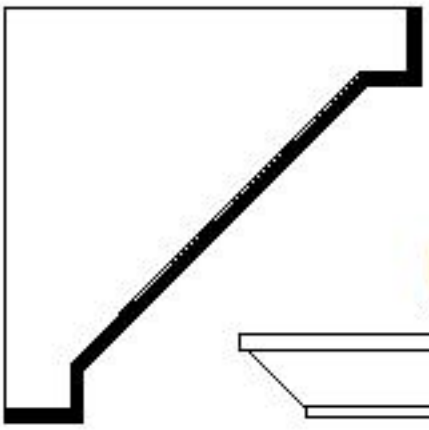

Standard Sizes

XS	4" x 4"
S	6" x 6"
M	8" x 8"
L	10" x 10"
XL	12" x 12"

FMC070

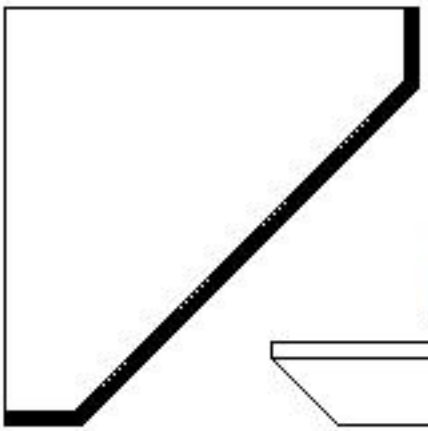

Standard Sizes

XS	4" x 4"
S	6" x 6"
M	8" x 8"
L	10" x 10"
XL	12" x 12"

FMC080

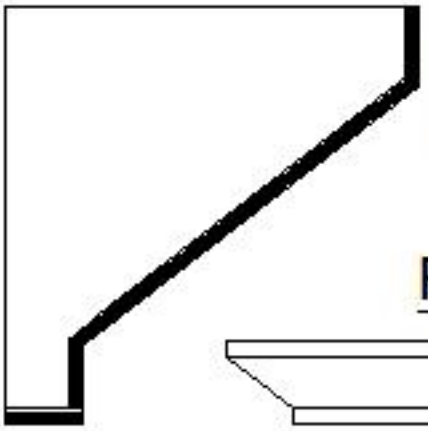

Standard Sizes

XS	4" x 4"
S	6" x 6"
M	8" x 8"
L	10" x 10"
XL	12" x 12"

FMC090

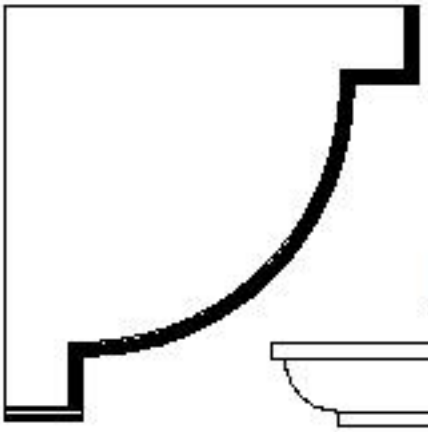

Standard Sizes

XS	4" x 4"
S	6" x 6"
M	8" x 8"
L	10" x 10"
XL	12" x 12"

FMC100

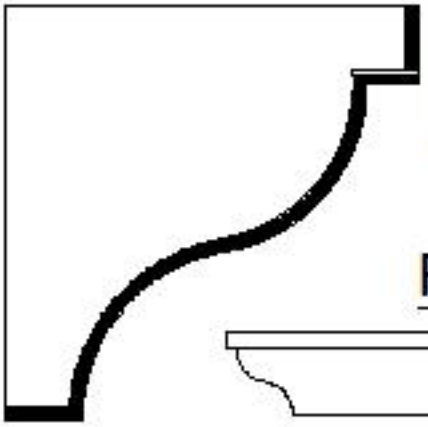

Standard Sizes

XS	4" x 4"
S	6" x 6"
M	8" x 8"
L	10" x 10"
XL	12" x 12"

FMC110

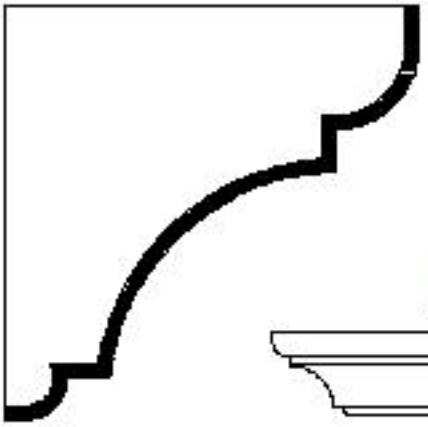

Standard Sizes

XS	4" x 4"
S	6" x 6"
M	8" x 8"
L	10" x 10"
XL	12" x 12"

FMC120

Crowns

11852 Glenoaks Blvd. San Fernando, CA 91340

foamremodel.com

818-365-9590 Tel
818-365-9591 Fax

***** *Customize to your specifications at no additional charge* *****

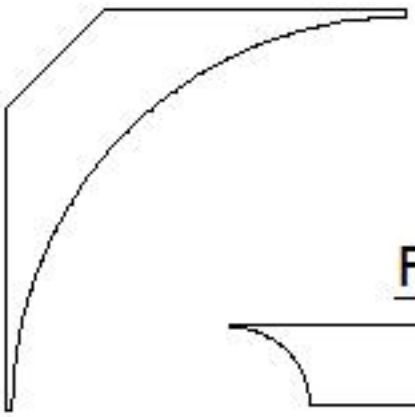

Standard Sizes

XS	4" x 4"
S	6" x 6"
M	8" x 8"
L	10" x 10"
XL	12" x 12"

FMCV001

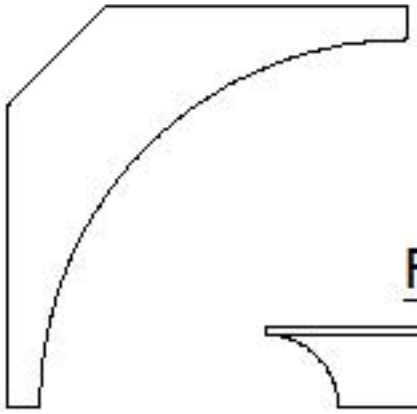

Standard Sizes

XS	4" x 4"
S	6" x 6"
M	8" x 8"
L	10" x 10"
XL	12" x 12"

FMCV010

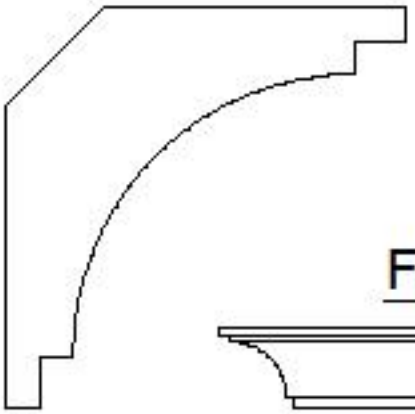

Standard Sizes

XS	4" x 4"
S	6" x 6"
M	8" x 8"
L	10" x 10"
XL	12" x 12"

FMCV020

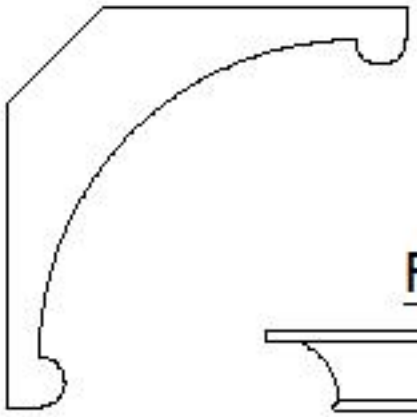

Standard Sizes

XS	4" x 4"
S	6" x 6"
M	8" x 8"
L	10" x 10"
XL	12" x 12"

FMCV030

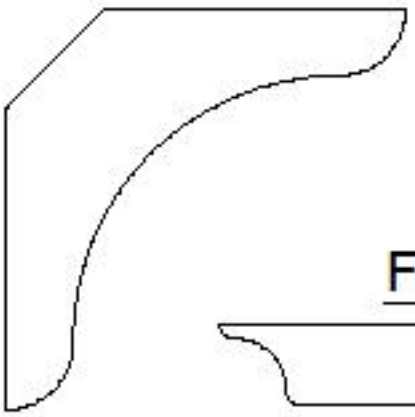

Standard Sizes

XS	4" x 4"
S	6" x 6"
M	8" x 8"
L	10" x 10"
XL	12" x 12"

FMCV040

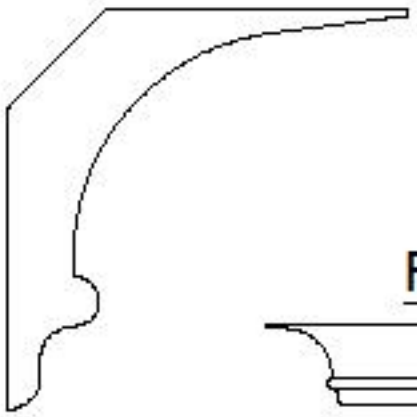

Standard Sizes

XS	4" x 4"
S	6" x 6"
M	8" x 8"
L	10" x 10"
XL	12" x 12"

FMCV090

Coves

11852 Glenoaks Blvd. San Fernando, CA 91340

foamremodel.com

818-365-9590 Tel
818-365-9591 Fax

FMK002

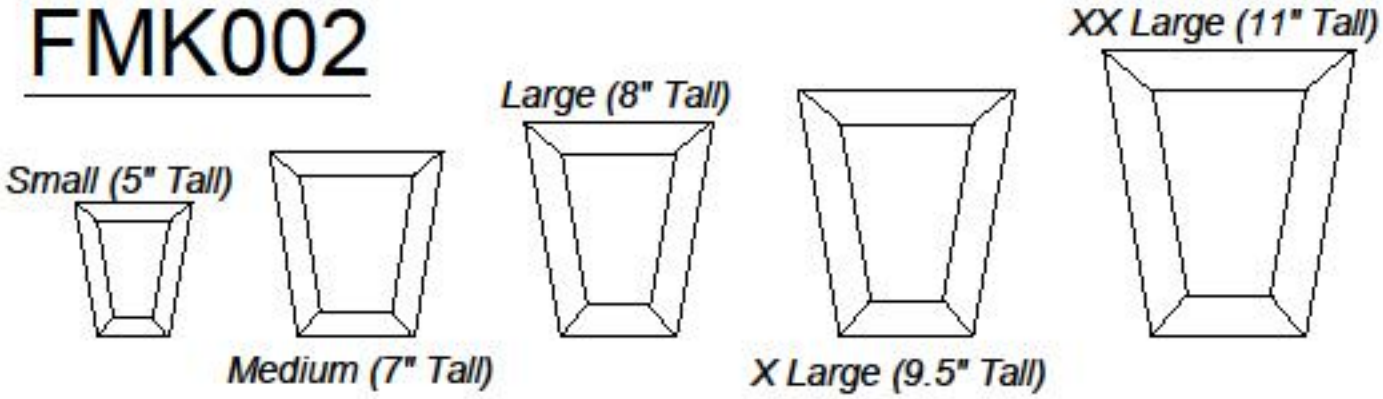

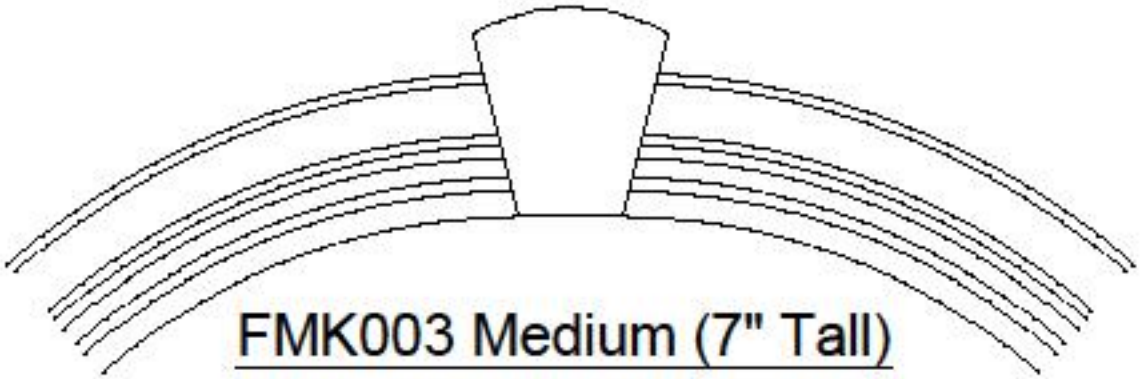

FMK003 Medium (7" Tall)

FMK001

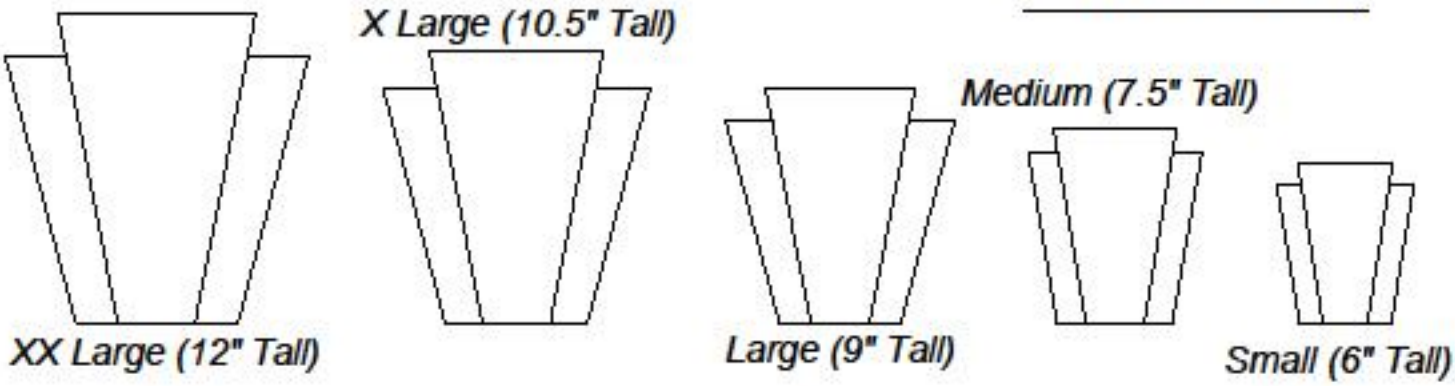

Keystones/Center Ornaments

11852 Glenoaks Blvd. San Fernando, CA 91340

foamremodel.com

818-365-9590 Tel
818-365-9591 Fax

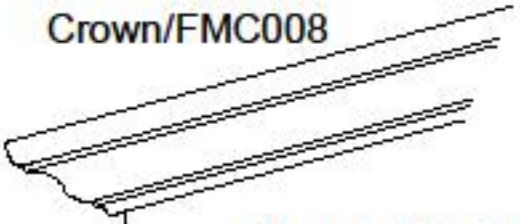

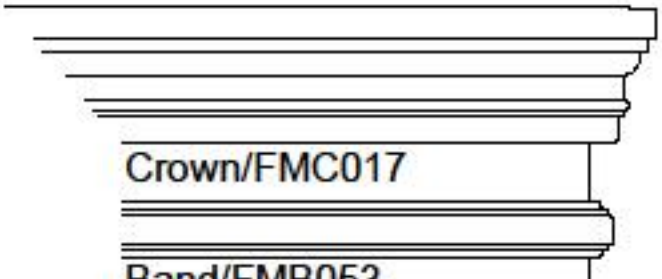

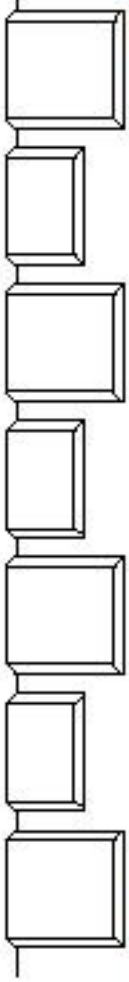

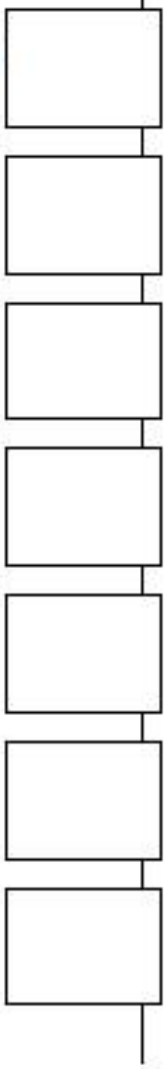

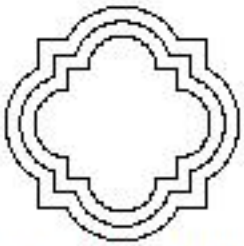

Quatrefoil FMQF001
24" x 24" Outside
11" x 11" Inside

Rosette 001
24" OD, 1.5" or 2" depth

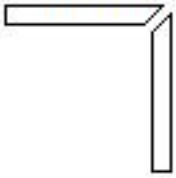

Standard Size Shown
12" Tall
12" Long Side
8" Short Side
2" Depth

Standard Size Shown
12" Tall
16" Side
16" Side
2" Depth

Quoins/Corners/Quatrefoils

11852 Glenoaks Blvd. San Fernando, CA 91340

foamremodel.com

818-365-9590 Tel
818-365-9591 Fax

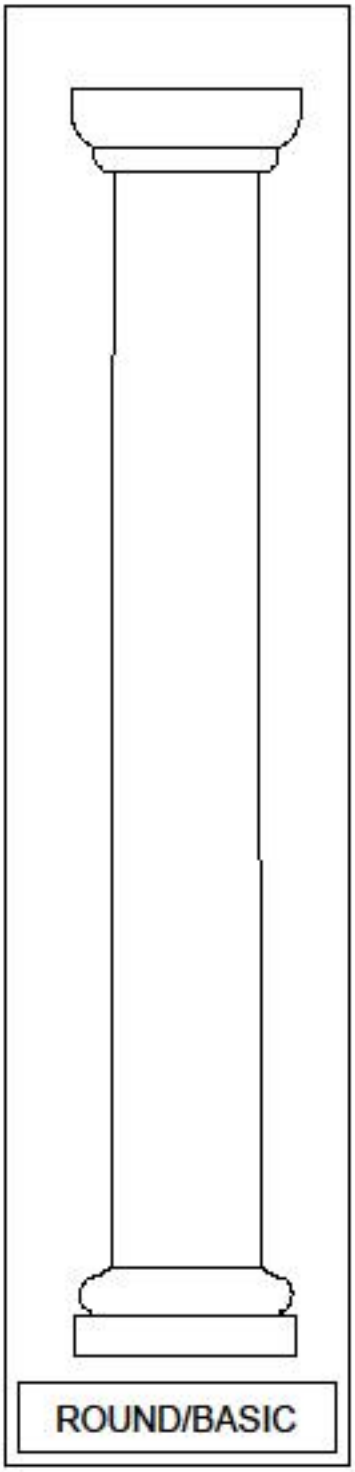

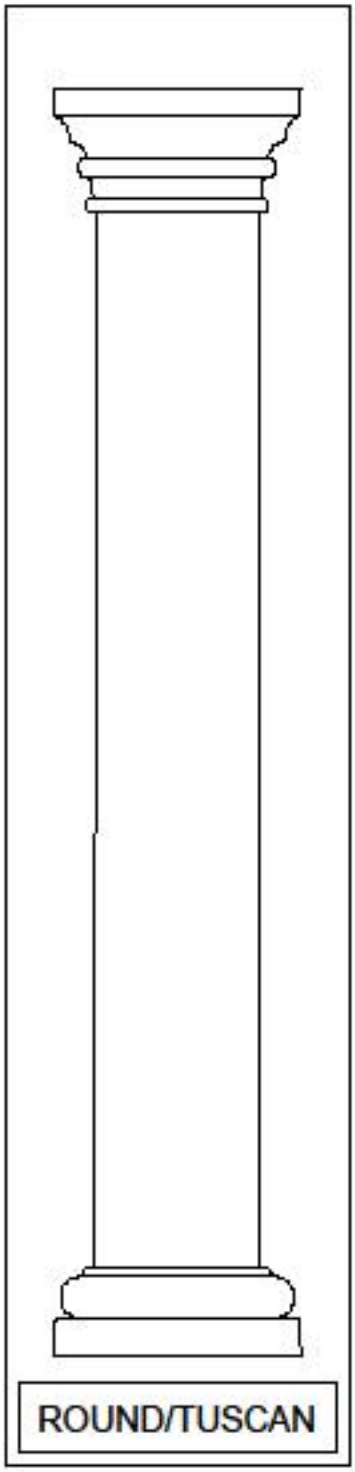

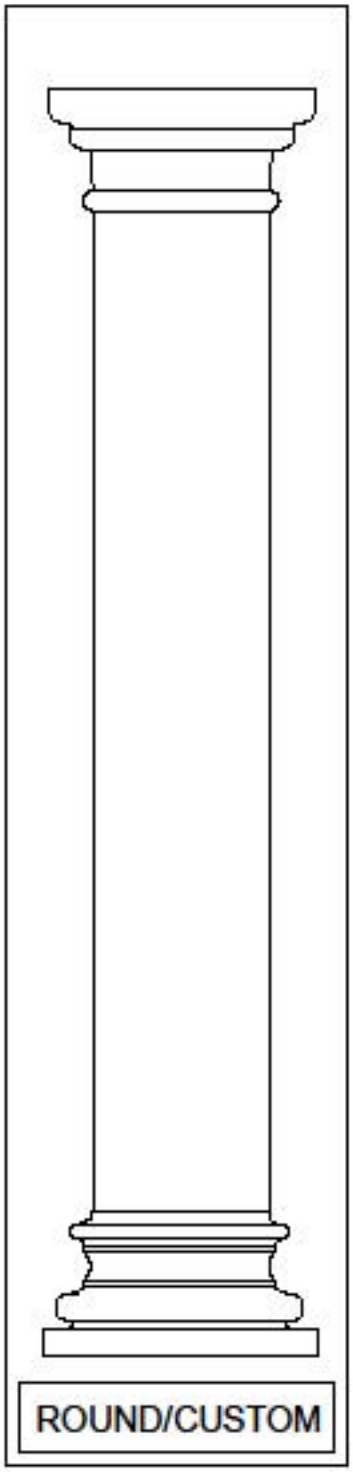

Columns

11852 Glenoaks Blvd. San Fernando, CA 91340

foamremodel.com

818-365-9590 Tel
818-365-9591 Fax

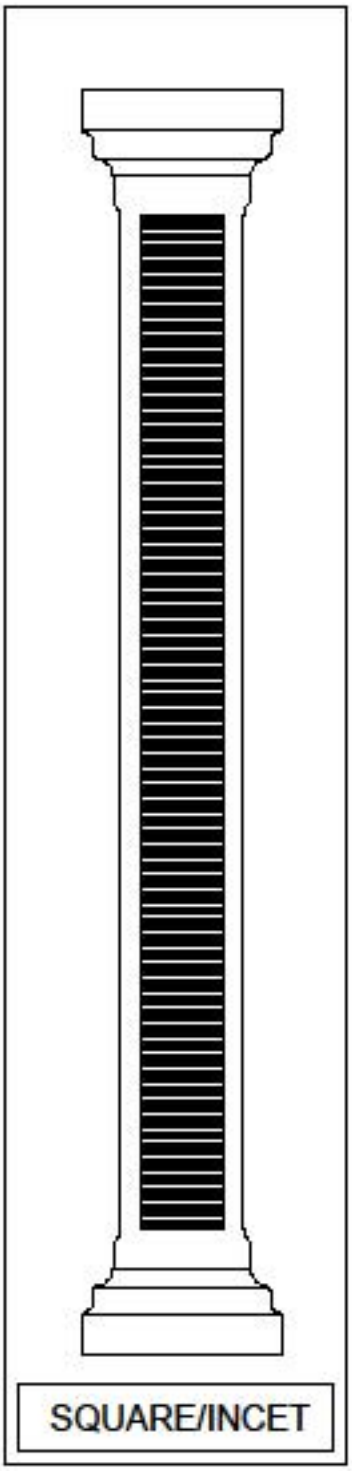

SQUARE/INCET

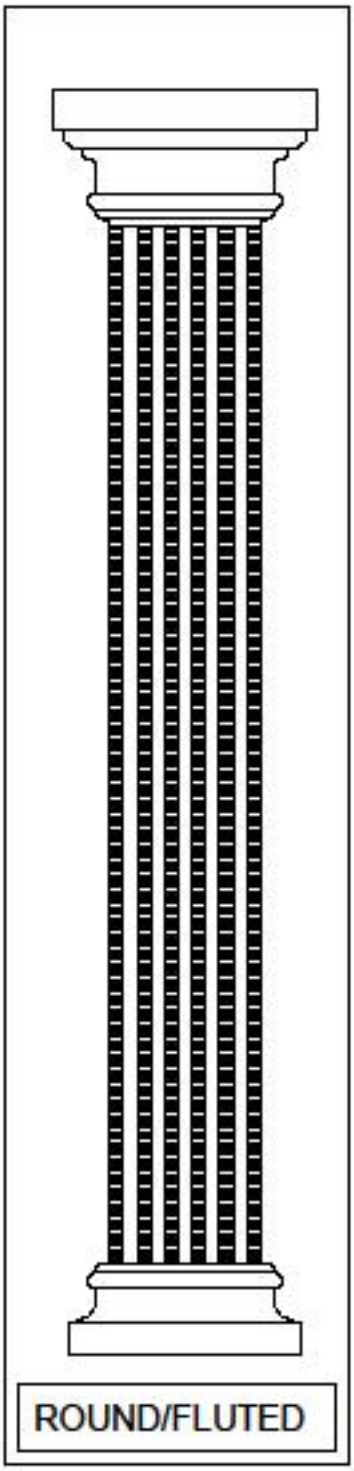

ROUND/FLUTED

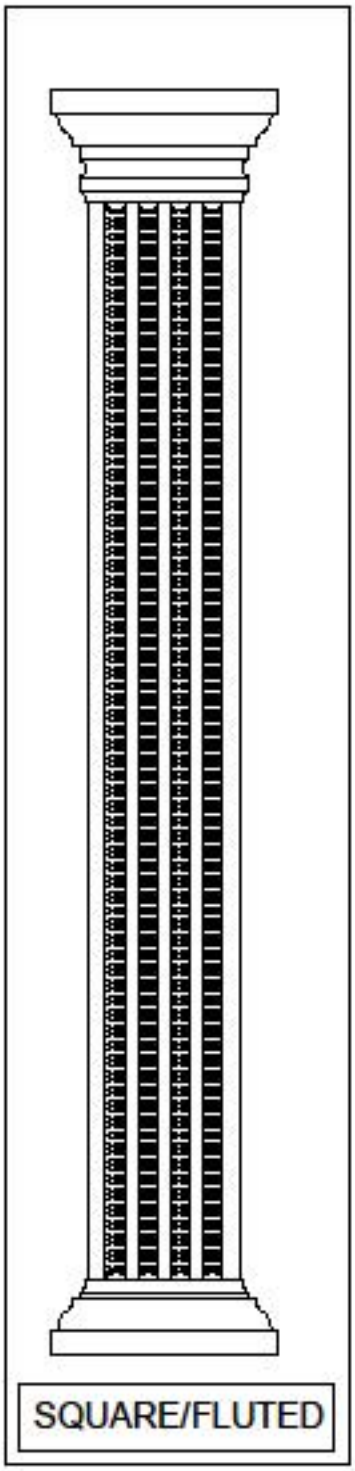

SQUARE/FLUTED

Columns

11852 Glenoaks Blvd. San Fernando, CA 91340

foamremodel.com

818-365-9590 Tel
818-365-9591 Fax

***** *Customize to your specifications at no additional charge* *****

FMF002

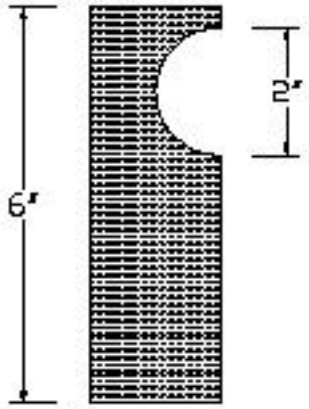

FMF02p5

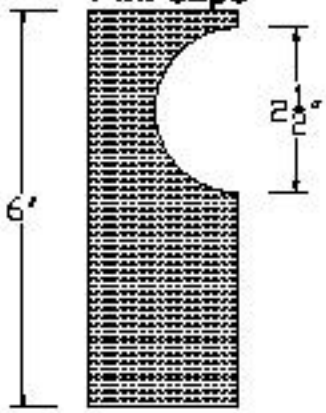

FMF003

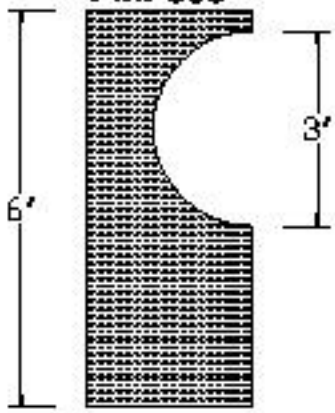

FMF03p5

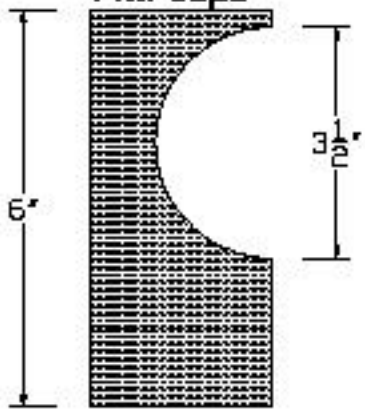

FMF004

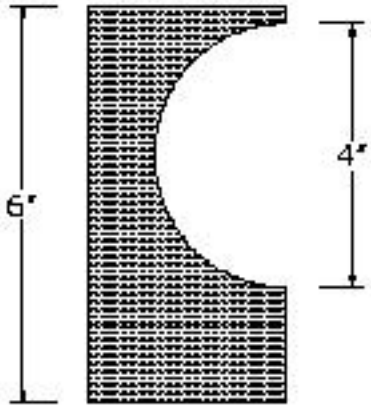

FMF025

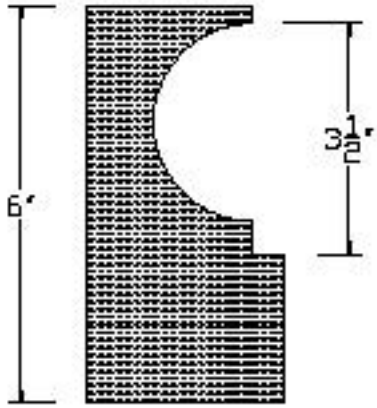

FMF035

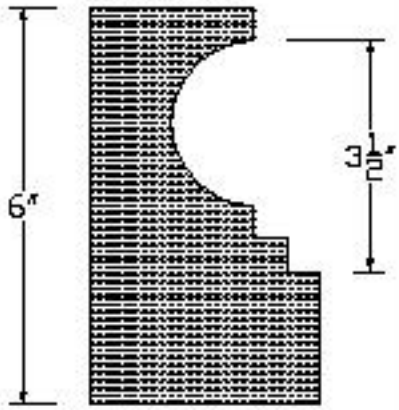

FMF045

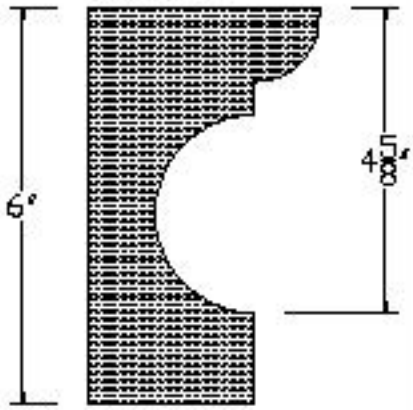

FMF055

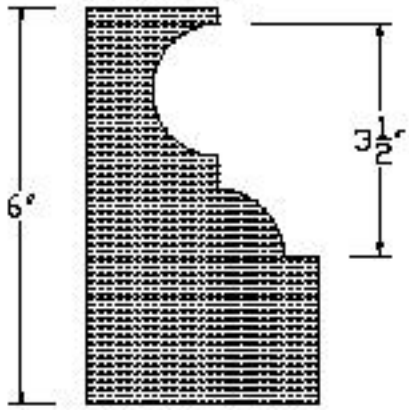

Coping Forms

11852 Glenoaks Blvd. San Fernando, CA 91340

foamremodel.com

818-365-9590 Tel
818-365-9591 Fax

Standard Sizes
1" x 2"
1" x 3"
1" x 4"
1" x 5"
1" x 6"
1" x 8"
1" x 10"
1" x 12"

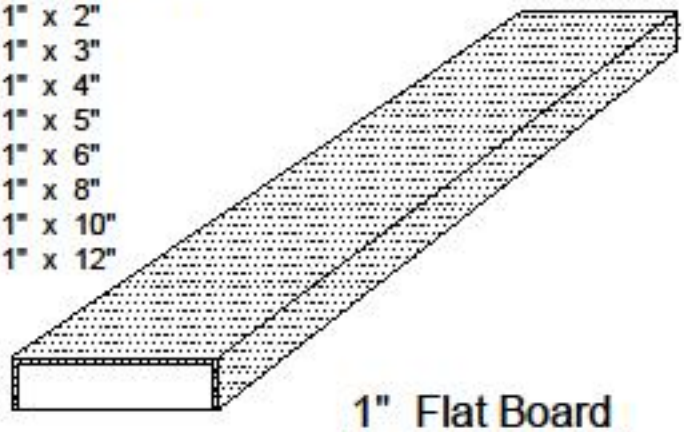

1" Flat Board

Standard Sizes
1.5" x 3.5"
1.5" x 4"
1.5" x 4.5"
1.5" x 5.5"
1.5" x 6"
1.5" x 8"
1.5" x 10"
1.5" x 12"

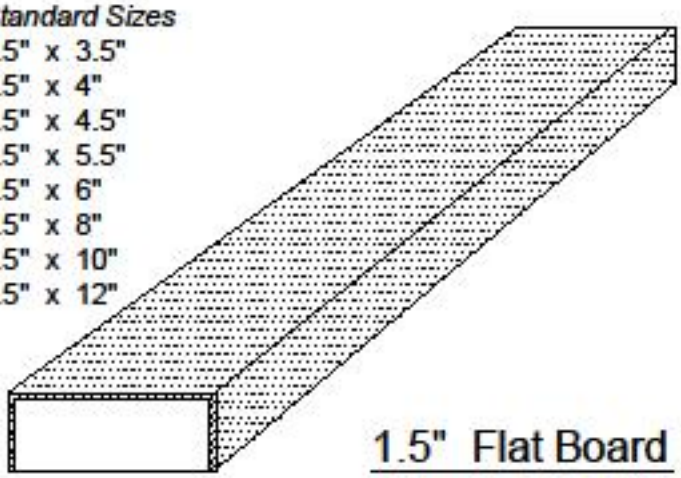

1.5" Flat Board

Standard Sizes
2" x 3"
2" x 4"
2" x 5"
2" x 6"
2" x 8"
2" x 10"
2" x 12"

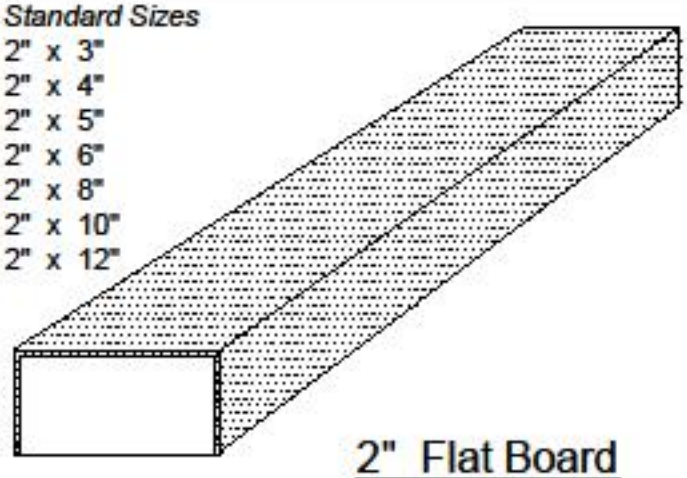

2" Flat Board

Standard Sizes
3" x 6"
3" x 8"
3" x 10"
3" x 12"

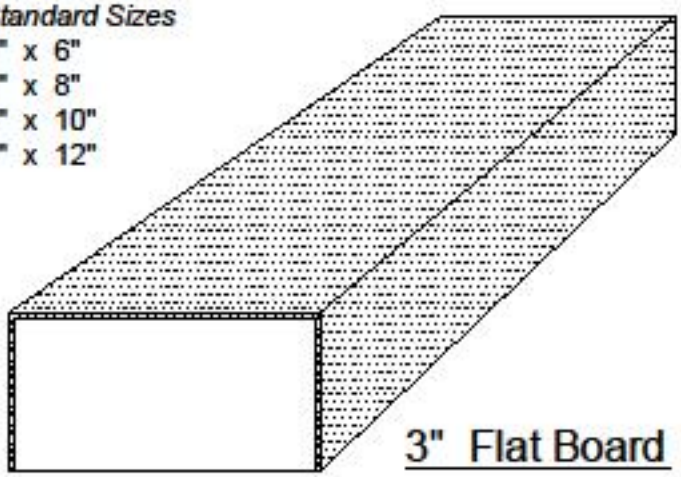

3" Flat Board

Standard Sizes
1" x 4"
1.5" x 3.5"
1.5" x 4"
1.5" x 5.5"
2" x 4"
2" x 6"
2" x 8"
3" x 6"

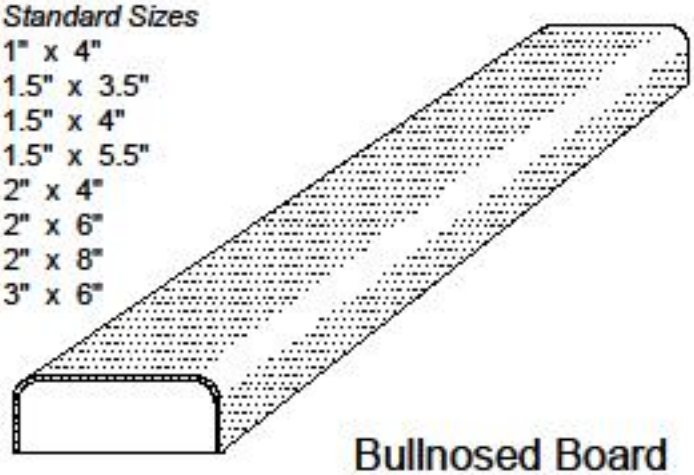

Bullnosed Board

Standard Thickness
1"
1.5
2"
2.5"
3"
4"
6"
8"
12"
24"
32"
36"
40"

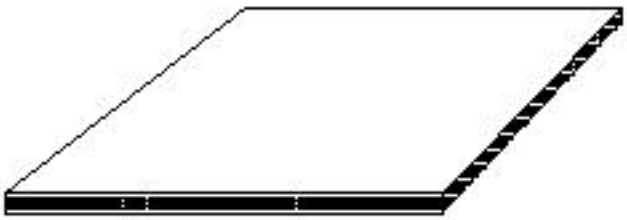

4' x 8' Sheets

Flat Stock

11852 Glenoaks Blvd. San Fernando, CA 91340

foamremodel.com

818-365-9590 Tel
818-365-9591 Fax

Style 001 W24"

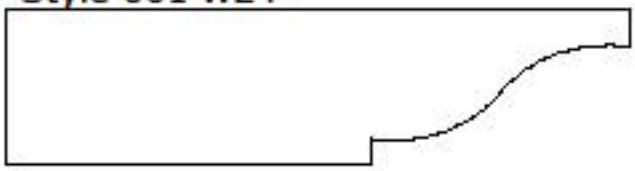

Style 001 W18"

Style 001 W14"

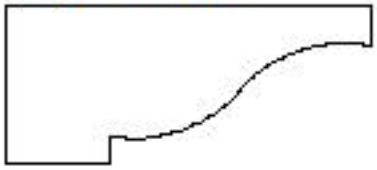

Style 001 W12"

Bracket Style BRKT 1A

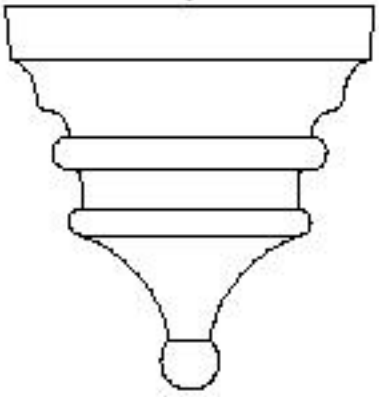

Style 002 W14"

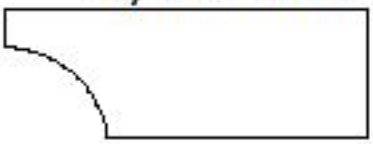

Style 002 W18"

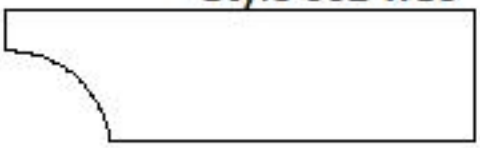

Style 002 W24"

Style 003 W24"

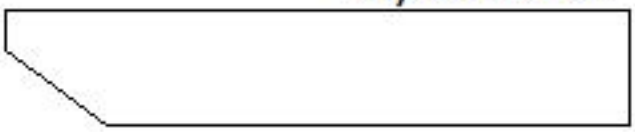

Style 004 W24"

Style 005 W11" x H8"

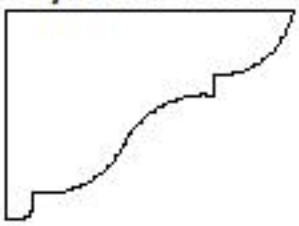

Corbels/Brackets/Rafter Tails

11852 Glenoaks Blvd. San Fernando, CA 91340

foamremodel.com

818-365-9590 Tel
818-365-9591 Fax

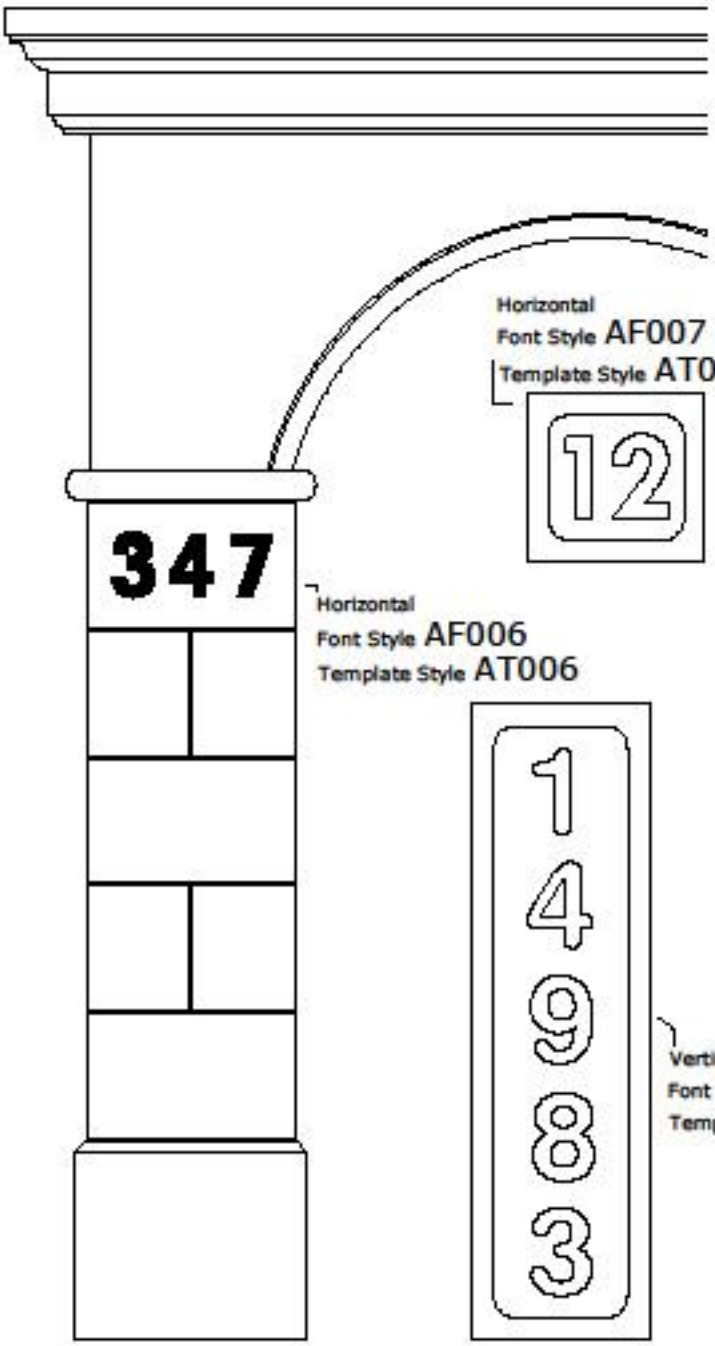

Horizontal
Font Style AF006
Template Style AT006

Vertical
Font Style AF001
Template Style AT001

Horizontal
Font Style AF007
Template Style AT001

Horizontal
Font Style AF005
Template Style AT002

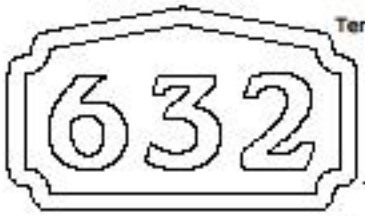

Horizontal
Font Style AF002
Template Style AT003

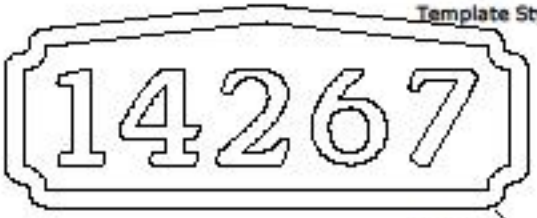

Horizontal
Font Style AF004
Template Style AT003

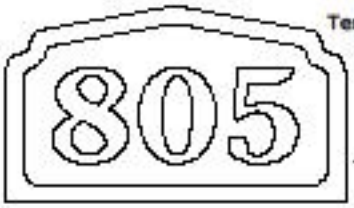

Horizontal
Font Style AF003
Template Style AT004

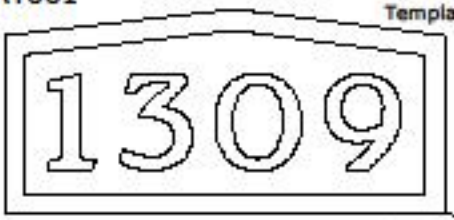

Horizontal
Font Style AF005
Template Style AT005

Address Numbers

11852 Glenoaks Blvd. San Fernando, CA 91340

foamremodel.com

818-365-9590 Tel
818-365-9591 Fax

Pilaster Caps are made to order at any custom size

Contact Foam Mouldings to request a drawing with complete specifications

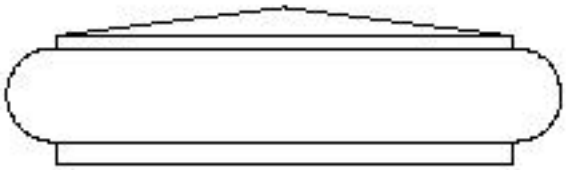

FMPC001

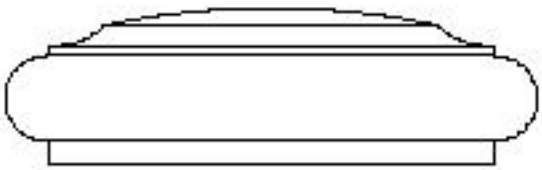

FMPC010

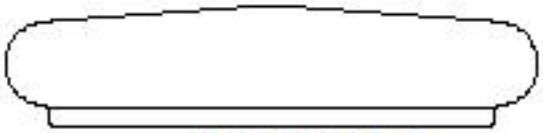

FMPC020

FMPC030

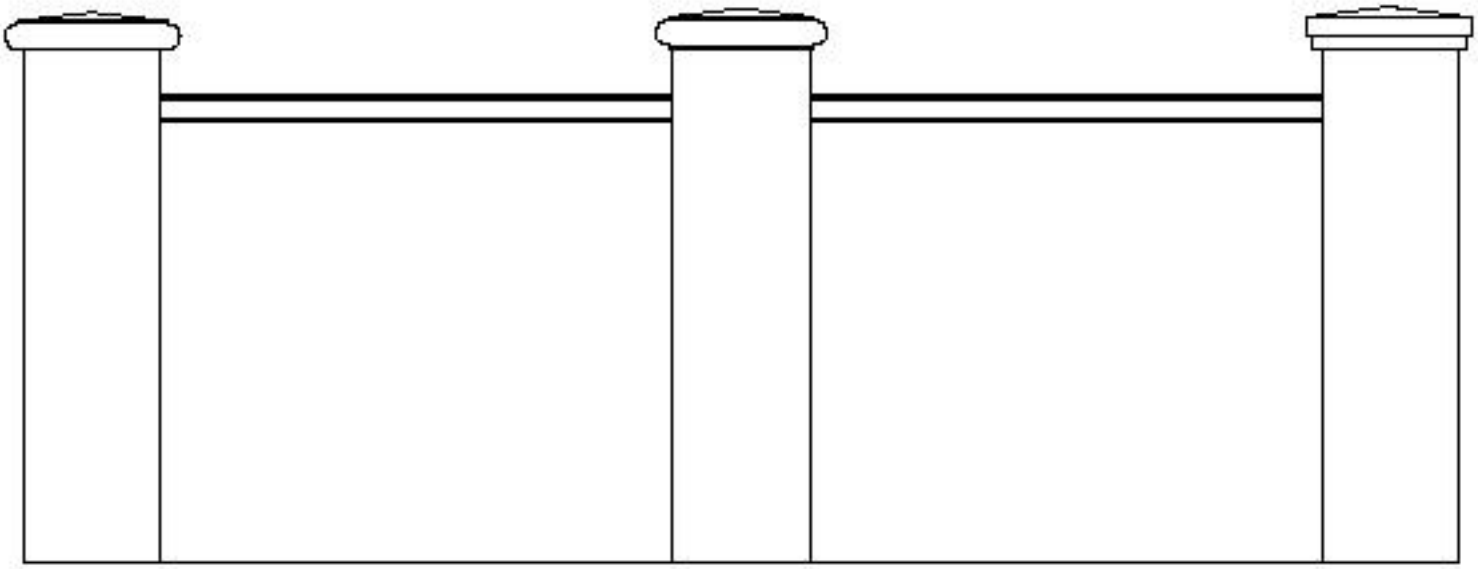

Pilaster Caps

11852 Glenoaks Blvd. San Fernando, CA 91340

foamremodel.com

818-365-9590 Tel
818-365-9591 Fax

Wall Caps are made to fit 6" or 8" block walls
Custom sizing available upon request

Contact Foam Mouldings to request a drawing with complete specifications

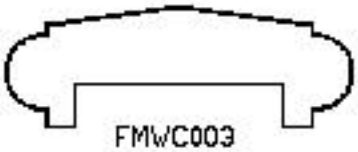

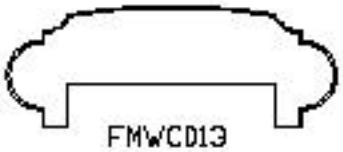

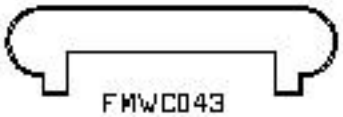

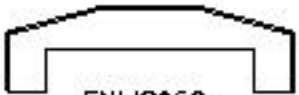

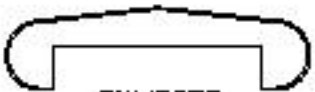

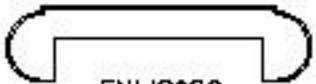

Wall Caps

11852 Glenoaks Blvd. San Fernando, CA 91340